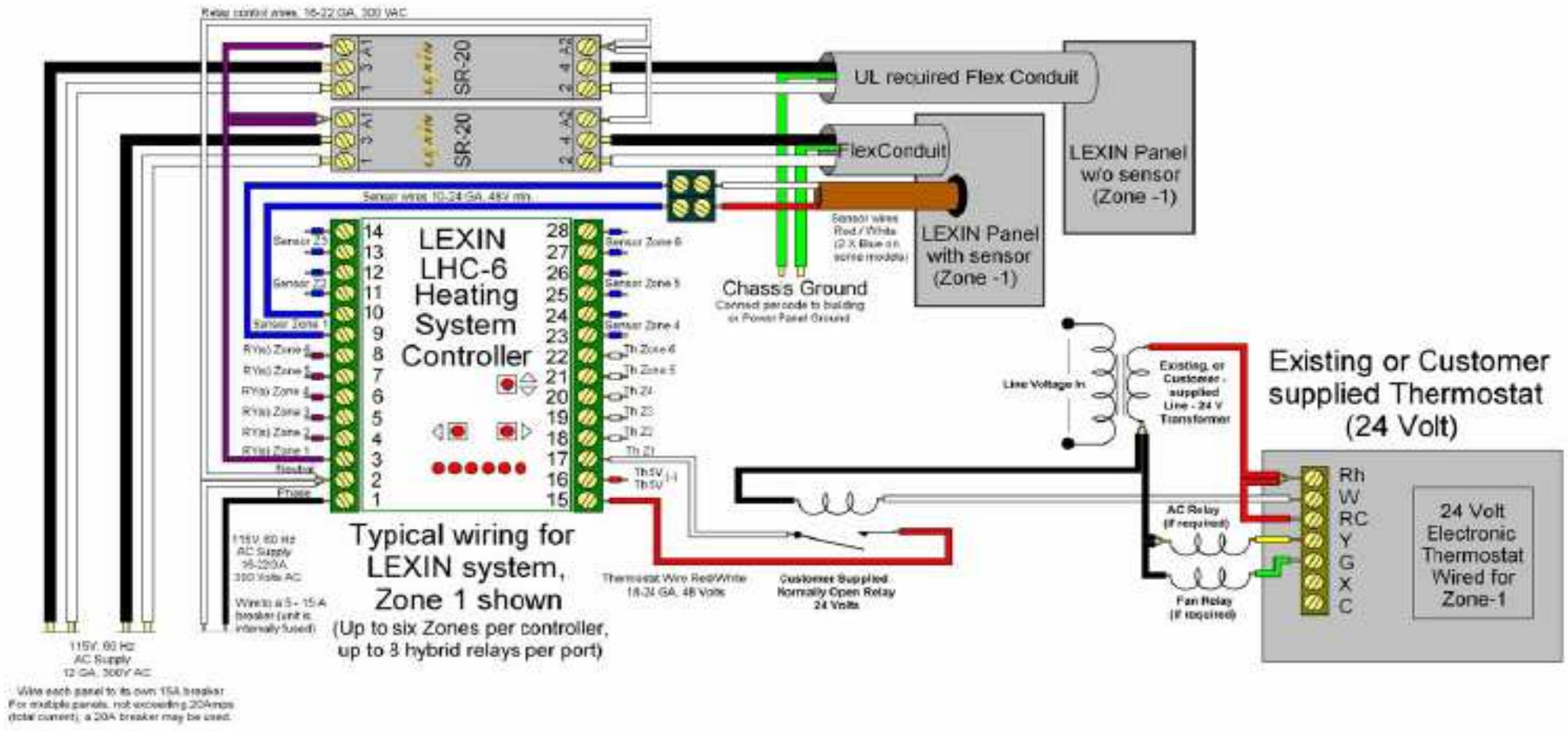
Relay control wires, 16-22 GA, 300 VAC
SR-20
SR-20
UL recuired Flex Conduit
FlexConduit
LEXIN Panel w/o sensor (Zone -1)
LEXIN Panel with sensor (Zone -1)
Sensor wires 10-24 GA, 48V min.
Sensor wires Red / White (2 X Blue on some models)
Chassis Ground
Connect per code to building or Power Panel Ground
LEXIN LHC-6 Heating System Controller
Sensor Zone 6
Sensor Zone 5
Sensor Zone 4
Th Zone 6
Th Zone 5
Th Z4
Th Z3
Th Z2
Th Z1
Th 5V
Th 5V
Sensor Z3
Sensor Z2
Sensor Zone 1
R(w) Zone 6
R(w) Zone 5
R(w) Zone 4
R(w) Zone 3
R(w) Zone 2
R(w) Zone 1
Neutral
Phase
Line Voltage In
Existing, or Customer - supplied Line - 24 V Transformer
Existing or Customer supplied Thermostat (24 Volt)
Rh
W
RC
Y
G
X
C
24 Volt Electronic Thermostat Wired for Zone-1
AC Relay (if required)
Fan Relay (if required)
115V, 60 Hz AC Supply 16-22GA 300 Volts AC
Wire to a 5 - 15 A breaker (unit is internally fused)
Typical wiring for LEXIN system, Zone 1 shown
(Up to six Zones per controller, up to 3 hybrid relays per port)
Thermostat Wire Red/White 18-24 GA, 48 Volts
Customer Supplied Normally Open Relay 24 Volts
115V, 60 Hz AC Supply 12 GA, 300V AC
Wire each panel to its own 15A breaker. For multiple panels, not exceeding 20Amps (total current), a 20A breaker may be used.